卷册检索号 SEARCH NO. OF THE VOLUME
MLHVDC-LCS-ECI-DD-CS-0315 30-B003701S-T0315

第 1 页 共 1 页
PAGE 1 OF 1

图纸文件目录（首页）

CATALOG OF DRAWING DOCUMENTS (HEAD PAGE)

拉合尔±660kV换流站 工程 施工图 阶段
±660kV Lahore Converter Station PROJECT Detail Design DESIGN STAGE

结构 专业 第 03 卷 第 15 册
Structure SPECIALITY VOLUME BOOK

卷册名称 换流变防火墙上设备支架结构图
Volume name Detail drawings for Equipment bracket on the Converter transformer firewall of valve hall

批 准 APPROVED BY	
审 核 REVIEWED BY	
设计/勘测 DESIGNED BY/ SURVEYED BY	
图 纸 4 张 DRAWING NOS.	打印件 1 本 PRINTED COPIES NOS.

序号 No.	图 号 DRAWING NO.	文 件 名 称 DOCUMENT TITLE	版本 EDITION	张 NOS.	本 NOS.	备注 REMARKS
1	30-B003701S-T0315-001	换流变防火墙上设备支架布置图 Plan layout for Equipment bracket on the Converter transformer firewall of valve hall	A	1		
2	30-B003701S-T0315-002	支架详图1 Detail drawing 1 of equipment bracket	A	1		
3	30-B003701S-T0315-003	支架详图2 Detail drawing 2 of equipment bracket	A	1		
4	30-B003701S-T0315-004	支架详图3 Detail drawing 3 of equipment bracket	A	1		

注:

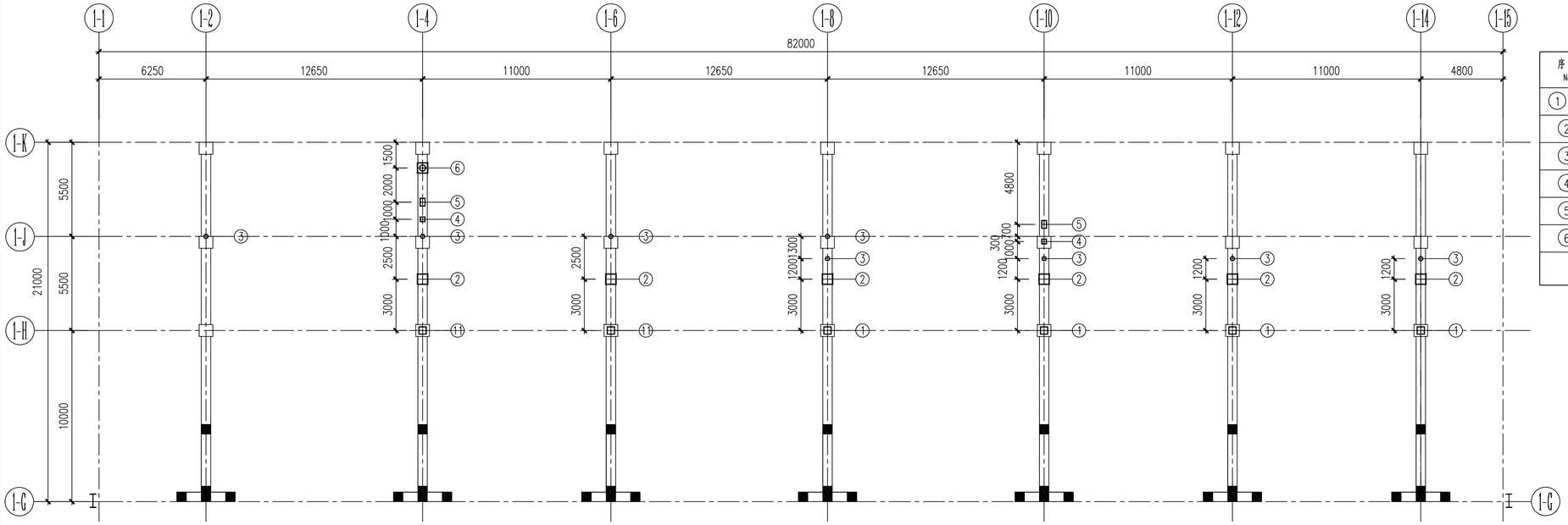

极1阀厅换流变防火墙上设备支架布置图

Plan layout for Equipment bracket on the firewall of pole 1 valve hall

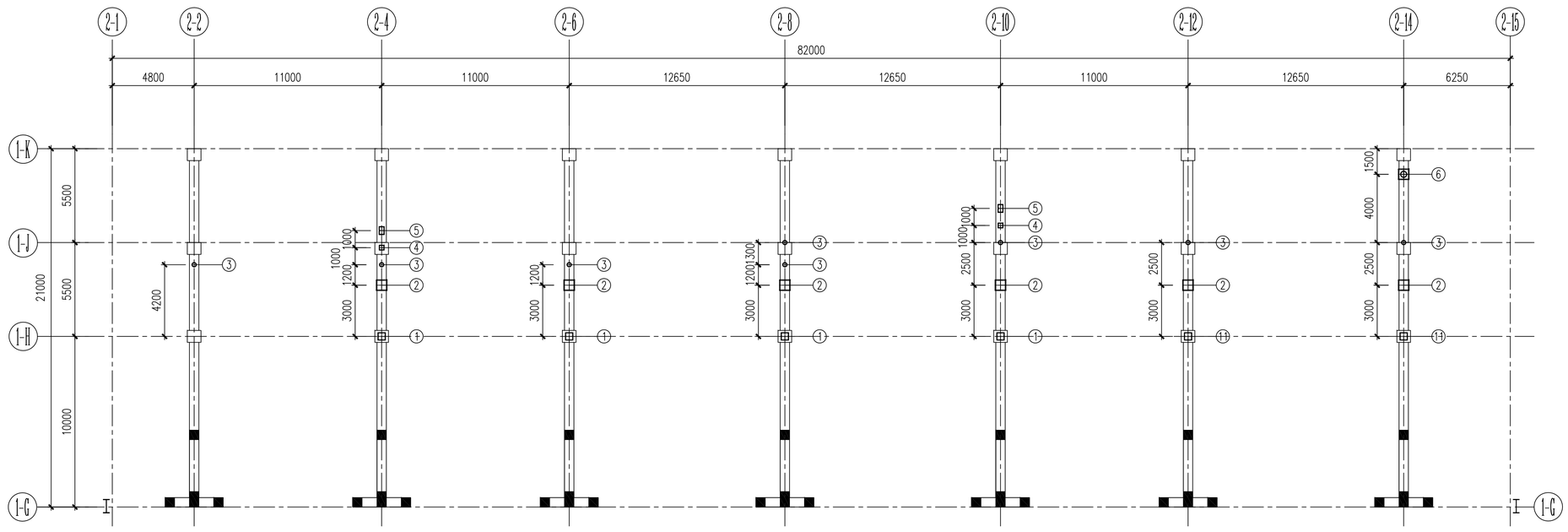

极2阀厅换流变防火墙上设备支架布置图

Plan layout for Equipment bracket on the firewall of pole 2 valve hall

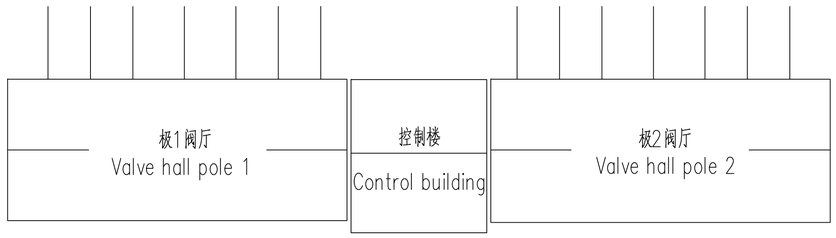

极1阀厅、极2阀厅换流变防火墙上设备支架统计表

Statistics table for Equipment bracket on the firewall of pole 1/2 valve hall

序号 No	支架名称 Name	支架编号 Bracket number	单位 unit	数量 Quantity	单重(kg) subtotal weight	总重(kg) total weight	支架施工图图号 Figure of equipment bracket
1 11	高压避雷器支架 High voltage arrester bracket	ZJ1	个	12	113.83	1365.96	30-B003701S-T0315-002
2	电容器支架 Capacitor bracket	ZJ2	个	12	148.81	1785.72	30-B003701S-T0315-002
3	支柱绝缘子支架 Neutral pillar insulators bracket	ZJ3	个	16	17.62	281.92	30-B003701S-T0315-003
4	中性点避雷器支架 Neutral point Arrester bracket	ZJ4	个	4	26.36	105.44	30-B003701S-T0315-003
5	中性点CT支架 Neutral point CT bracket	ZJ5	个	4	37.46	149.84	30-B003701S-T0315-003
6	500kV支柱绝缘子支架 500kV pillar insulators bracket	ZJ6	个	2	178.04	356.08	30-B003701S-T0315-004
总重：4090.56 kg							

说明:

1. 图中尺寸除注明外,均以mm为单位。
2. 图纸上的尺寸以标注为准，不能按比例量取。
3. 本图±0.000m标高为阀厅室内地面标高，相当于绝对标高193.90m。
4. 本图应结合《极1阀厅及防火墙上部结构图》T0802分册、《极2阀厅及防火墙上部结构图》T0807分册施工。
5. 本工程初步设计尚未审定，未通过NTDC审核，本图存在修改的可能，施工前请联系CET与设计确认。

Notes:

1. All dimensions are notes in millimeters where not otherwise noted.
2. Only written dimensions shall be worked to, and don't measure in scale.
3. The figure ± 0.000m elevation for the valve hall indoor ground elevation, the absolute altitude of elevation ±0.000m is 193.90m.
4. The construction of this figure should be combined with " Super structure for pole 1 valve hall and firewall " T0802 volume, " Super structure for pole 2 valve hall and firewall " T0807 volume.
5. The initial design of the project has not yet been approved by NTDC, the pile foundation is possible to amend.Please contact the owner CET and designer before construction.

Reference Drawings

Drwg. No.	Title
30-B003701S-T0802	极1阀厅及防火墙上部结构图 Super structure for pole 1 valve hall and firewall
30-B003701S-T0807	极2阀厅及防火墙上部结构图 Super structure for pole 2 valve hall and firewall

Revisions			
A	优俊	2018.07.15	First issue
	Name	Date	Notes

巴基斯坦默蒂亚里—拉合尔±660kV直流输电工程

±660kV HVDC Project from Matiari to Lahore in Pakistan

NATIONAL TRANSMISSION & DESPATCH COMPANY (NTDC) LIMITED PAKISTAN

CONTRACTOR 国家电网 STATE GRID 中国电力技术装备有限公司 CHINA ELECTRIC POWER EQUIPMENT AND TECHNOLOGY CO.,LTD.

SUBCONTRACTOR East China Electric Power Design Institute Co.,Ltd.

拉合尔±660kV换流站

±660kV Lahore Converter Station

设计阶段 PHASE: 施工图 Detail Design

M L H V D C - L C S - E C I - D D - C S - 0 3 1 5 - 0 0 1 A

	姓名 Name	日期 Date
设计 Designed	优俊	18.07.15
校核 Checked	史洪涛	18.07.15
审核 Reviewed	王印 刘江	18.07.15
批准 Approved	刘江	18.07.15
比例 Scale		图号 DWG NO.

换流变防火墙上设备支架布置图

Plan layout for Equipment bracket on the Converter transformer firewall of valve hall

30-B003701S-T0315-001

版本 REV. A

电气	郑煜	18.07.15
专业 Speciality	会签 Sign	日期 Date

594X841

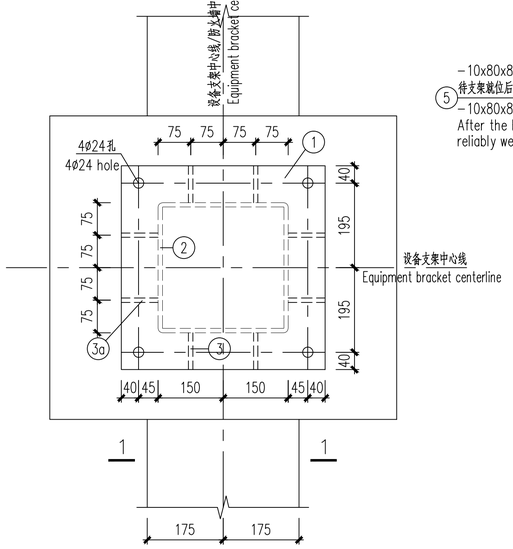

①⑪高压避雷器支架ZJ1(俯视图)

High voltage arrester bracket ZJ1 (top view)

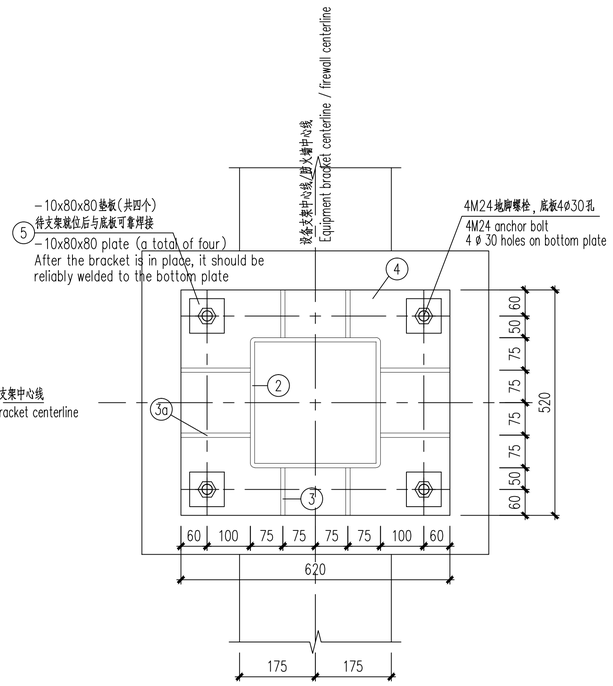

2-2

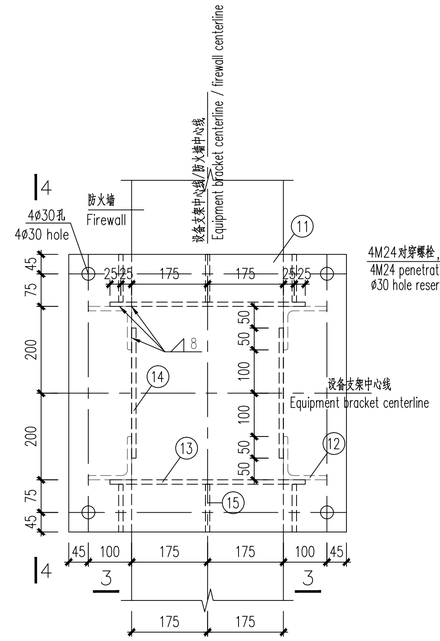

②电容器支架ZJ2(俯视图)

Capacitor bracket ZJ1 (top view)

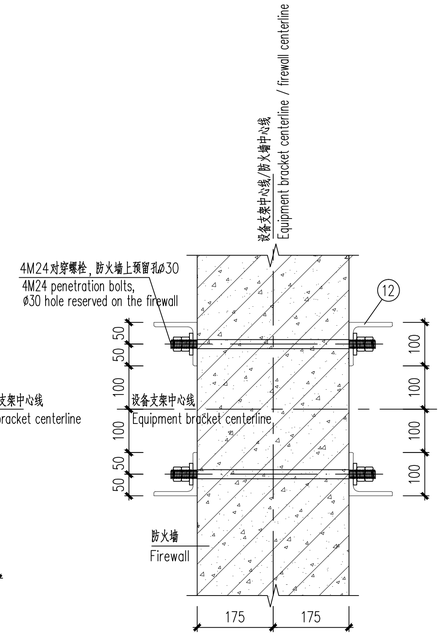

5-5

钢材材料表

Steel material table

构件名称 Name	序号 No	规格 type	长度(mm) length	数量(个) quantity	单计(kg) Single weight	小计(kg) subtotal	合计(kg) total
ZJ1	①	-16x470	470	1	27.75	27.75	113.83
	②	□300x8	237	1	17.38	17.38	
	③	-8x110	237	4	1.64	6.56	
	③a	-8x160	237	4	2.38	9.52	
	④	-20x520	620	1	50.62	50.62	
	⑤	-10x80	80	4	0.50	2.00	
ZJ2	⑪	-16x640	640	1	51.45	51.45	148.81
	⑫	L100x10	984	4	14.88	59.52	
	⑬	-8x324	450	2	9.44	18.88	
	⑭	-8x324	300	2	6.29	12.58	
	⑮	-8x100	100	6	0.69	4.14	
	⑩②	-10x60	60	8	0.28	2.24	

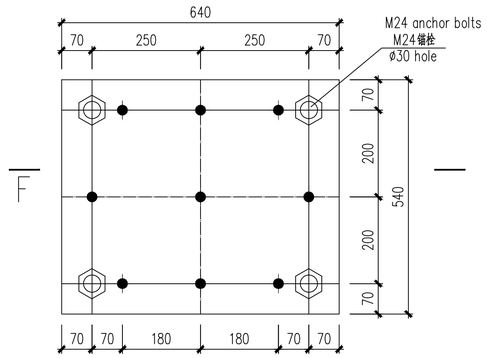

M3(Q345B)

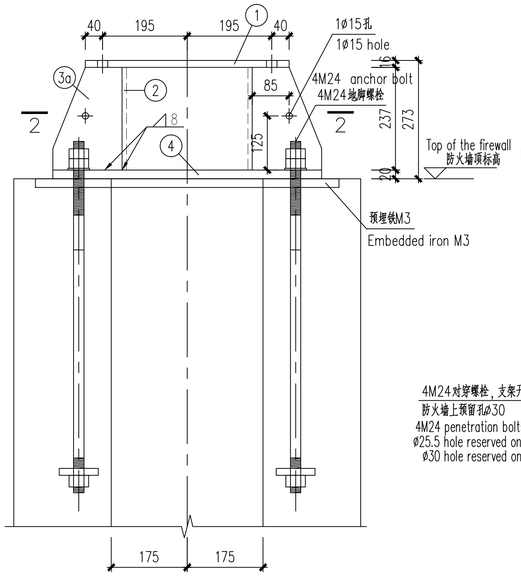

1-1

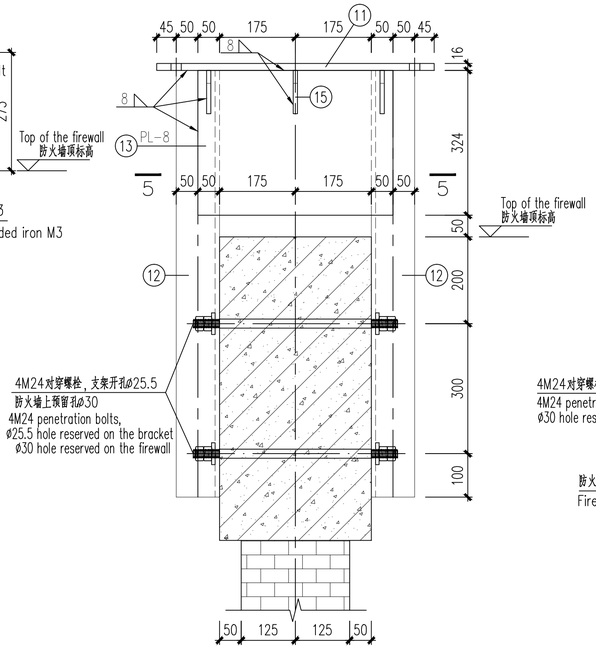

3-3

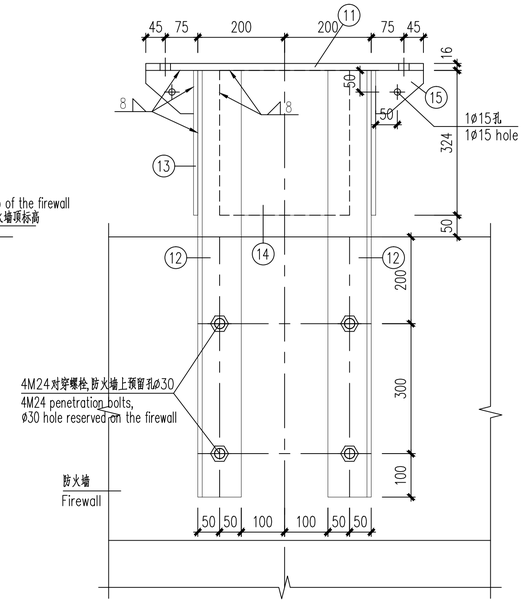

4-4

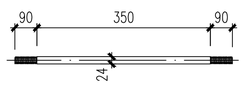

M24对穿螺栓详图

Detail design of M24 penetration bolts

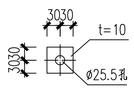

⑩②垫片详图

Gasket details

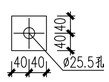

⑤垫板详图

Plate details

说明:

1. 说明详见001图及003图。
2. M24地脚螺栓详见003图。

Notes:

1. For details, please refer to Drawing 001 and 003.
2. M24 anchor bolt please refer to Drawing 003.

电气	郑煜	2018.06.15
专业 Speciality	会签 Sign	日期 Date

Reference Drawings

Drwg. No.	Title

Revisions

	Name	Date	Notes
A	仇俊	2018.06.15	First issue

巴基斯坦默蒂亚里—拉合尔±660kV直流输电工程

±660kV HVDC Project from Matiari to Lahore in Pakistan

NATIONAL TRANSMISSION & DESPATCH COMPANY (NTDC) LIMITED PAKISTAN

CONTRACTOR 国家电网 STATE GRID 中国电力技术装备有限公司 CHINA ELECTRIC POWER EQUIPMENT AND TECHNOLOGY CO.,LTD.

SUBCONTRACTOR East China Electric Power Design Institute Co.,Ltd.

拉合尔±660kV换流站

±660kV Lahore Converter Station

设计阶段 PHASE: 施工图 Detail Design

M L H V D C - L C S - E C I - D D - C S - 0 3 1 5 - 0 0 2 A

	姓名 Name	日期 Date
设计 Designed	仇俊	2018.06.15
校核 Checked	金涛涛	2018.06.15
审核 Reviewed	王卫	2018.06.15
批准 Approved		2018.06.15

支架详图1

Detail drawing 1 of equipment bracket

比例 Scale	1:1	图号 DWG NO.	30-B003701S-T0315-002	版本 REV.	A

420X594

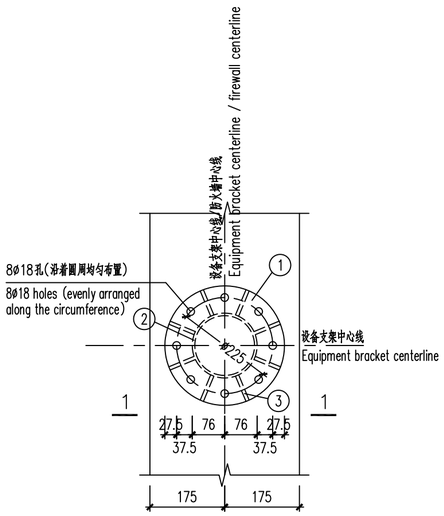

③中性点支柱绝缘子支架ZJ3(俯视图)

Neutral pillar insulators bracket ZJ3 (Top View)

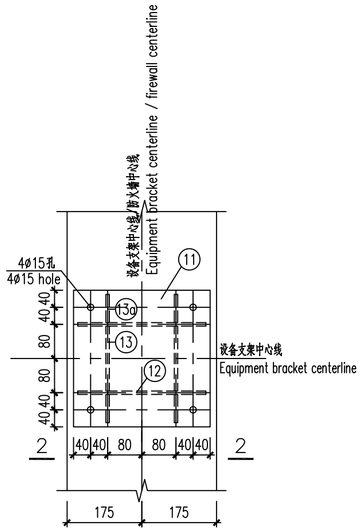

④中性点避雷器支架ZJ4(俯视图)

Neutral point Arrester bracket ZJ3 (Top View)

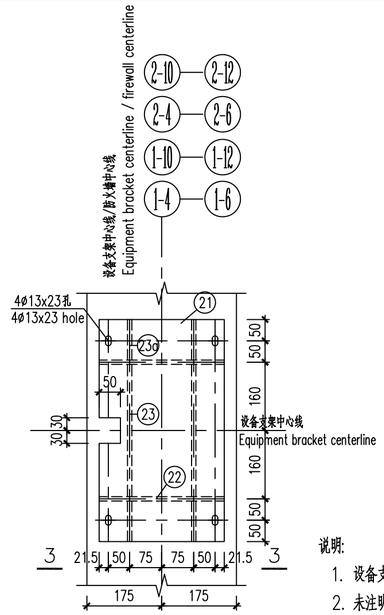

⑤中性点CT支架ZJ5(俯视图)

Neutral point CT bracket ZJ3 (Top View)

说明:

1. 设备支架采用钢材:Q235B,焊条:E43xx。
2. 未注明焊缝均满焊,焊缝高度hf=8mm。
3. 构件采用热镀锌防腐,现场焊接部位及镀锌层破坏处采用现场冷喷锌防腐。
4. 材料放样下料,材料表中尺寸仅供参考。
5. 对穿螺栓采用8.8级高强螺栓,采用热镀锌防腐,锚栓锚固粘结剂采用喜利得HIT-RE 500-SD。

钢材材料表

Steel material table

构件名称 Name	序号 No	规格 type	长度(mm) length	数量(个) quantity	单计(kg) Single weight	小计(kg) subtotal	合计(kg) total
ZJ3	①	-16xø280	-	1	7.73	7.73	17.62
	②	ø152x6	184	1	3.97	3.97	
	③	-8x64	184	8	0.74	5.92	
ZJ4	⑪	-16x320	320	1	12.86	12.86	26.36
	⑫	-8x184	300	2	3.47	6.94	
	⑬	-8x184	152	2	1.76	3.52	
	⑬a	-8x184	66	4	0.76	3.04	
ZJ5	㉑	-16x293	520	1	19.14	19.14	37.46
	㉒	-8x184	293	2	3.38	6.76	
	㉓	-8x184	310	2	3.58	7.16	
	㉓a	-8x184	95	4	1.10	4.40	

Notes:

1. Equipment bracket steel: Q235B, electrode: E43xx.
2. Not indicate the weld is full of welding, weld height hf = 8mm.
3. Components using hot-dip galvanizing corrosion, the site of welding and galvanized layer damage at the scene using cold zinc anti-corrosion.
4. Loft material processing, table size of materials is for reference only.
5. The penetration bolt use 8.8-level high strength bolts, adopt galvanized anti-corrosion, the anchoring adhesive adopt Hilti HIT-RE 500-SD.

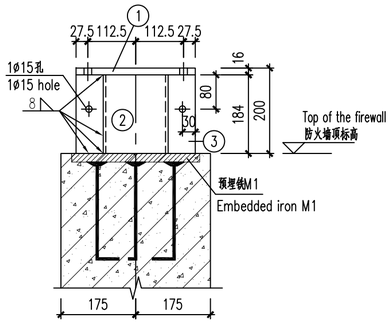

1-1

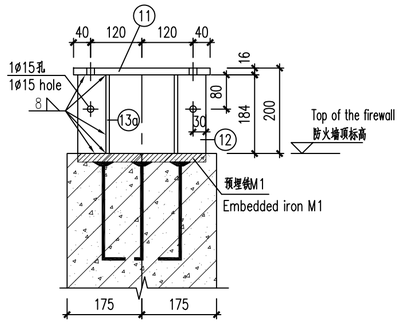

2-2

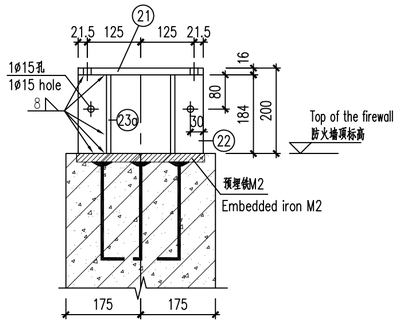

3-3

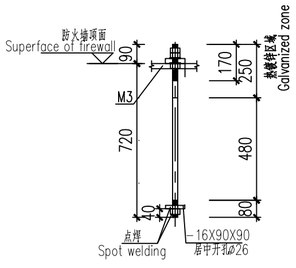

Detail of anchor bolt "M24"
L=810, Four nuts

"M24"地脚螺栓大样图
L=810,带4个螺母

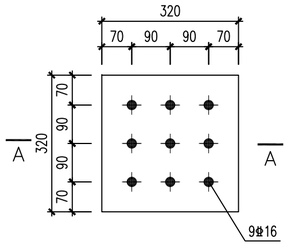

M1

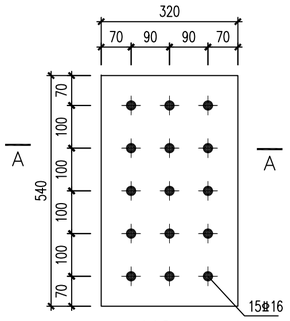

M2

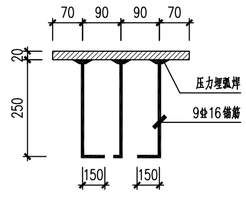

A-A

Reference Drawings

Drwg. No.	Title

Revisions

	Name	Date	Notes
A	仇俊	2018.07.15	First issue

巴基斯坦默蒂亚里—拉合尔±660kV直流输电工程

±660kV HVDC Project from Matiari to Lahore in Pakistan

NATIONAL TRANSMISSION & DESPATCH COMPANY (NTDC) LIMITED PAKISTAN

CONTRACTOR 国家电网 STATE GRID 中国电力技术装备有限公司 CHINA ELECTRIC POWER EQUIPMENT AND TECHNOLOGY CO.,LTD.

SUBCONTRACTOR East China Electric Power Design Institute Co.,Ltd.

拉合尔±660kV换流站

±660kV Lahore Converter Station

设计阶段 PHASE: 施工图 Detail Design

M L H V D C - L C S - E C I - D D - C S - 0 3 1 5 - 0 0 3 A

	姓名 Name	日期 Date
设计 Designed	仇俊	18.03.15
校核 Checked	金晓峰	18.07.15
审核 Reviewed	邓炜文	18.07.15
批准 Approved	[illegible]	18.07.15
比例 Scale	1:1	图号 DWG NO.

支架详图2

Detail drawing 2 of equipment bracket

30-B003701S-T0315-003

版本 REV. A

专业 Speciality	会签 Sign	日期 Date
电气	郑煜	18.07.15

420X594

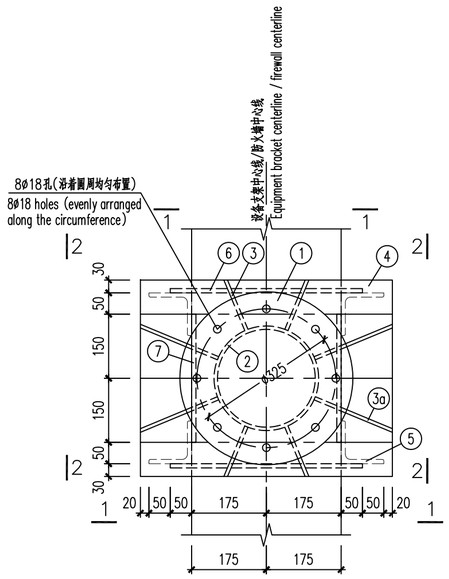

⑥500kV支柱绝缘子支架ZJ6(俯视图)

500kV pillar insulators bracket ZJ6 (Top View)

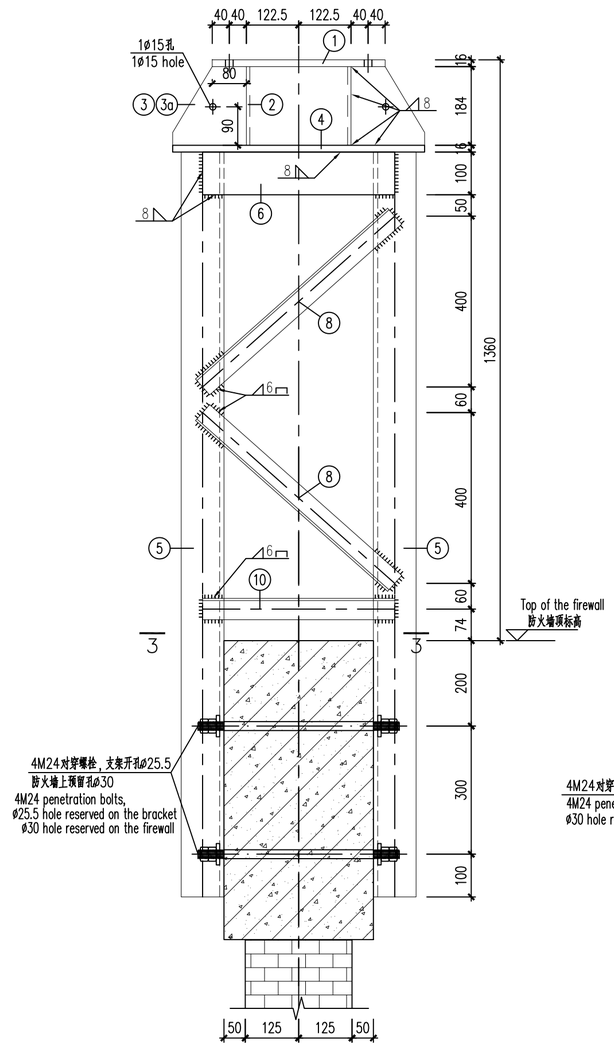

1-1

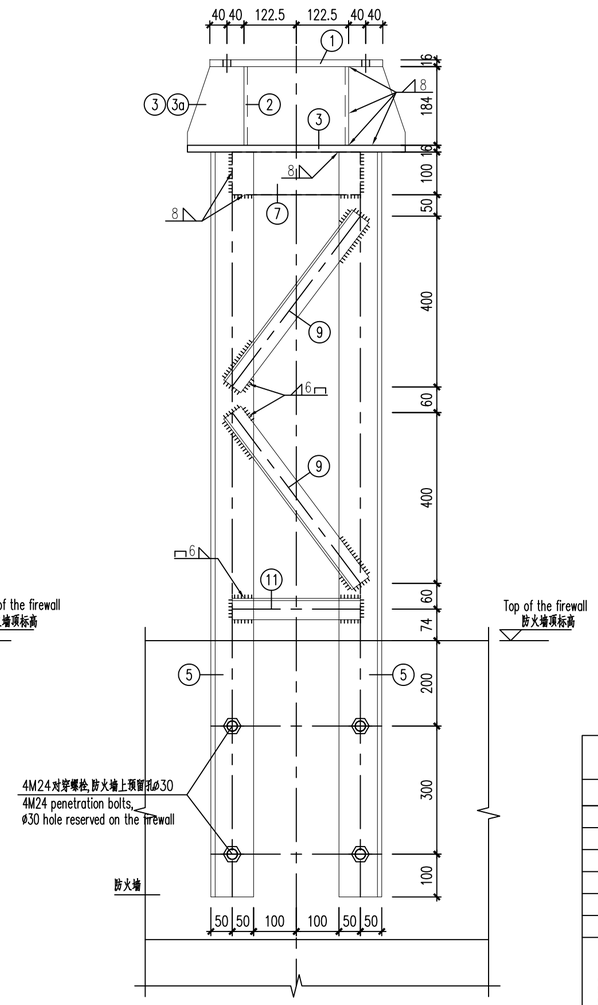

2-2

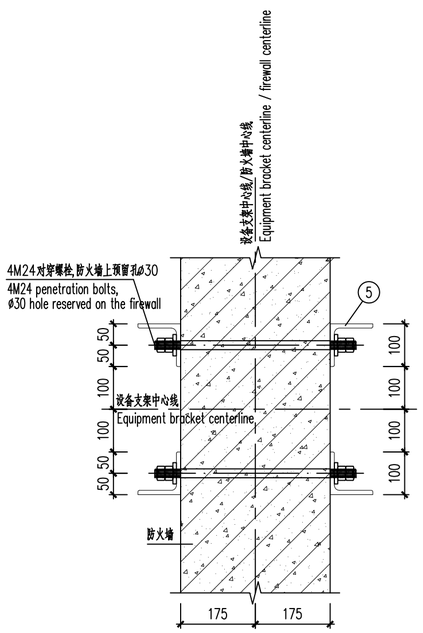

3-3

钢 材 材 料 表

Steel material table

构件名称 Name	序号 No	规格 type	长度(mm) length	数量(个) quantity	单计(kg) Single weight	小计(kg) subtotal	合计(kg) total
ZJ6	①	−16x∅405	−	1	16.18	16.18	178.04
	②	∅245x6	184	1	6.51	6.51	
	③	−8x184	128	4	1.48	5.92	
	③a	−8x184	198	4	2.29	9.16	
	④	−16x460	590	1	3.09	3.09	
	⑤	L100x10	1744	4	26.7	105.48	
	⑥	−8x100	450	2	2.83	5.66	
	⑦	−8x100	300	2	1.89	3.78	
	⑧	L50x5	602	4	2.27	9.08	
	⑨	L50x5	499	4	1.88	7.52	
	⑩	L50x5	450	4	1.70	3.40	
	⑪	L50x5	300	4	1.13	2.26	

说明:

1. 说明详见001图及003图。

Notes:

1. For details, please refer to Drawing 001 and 003.

Reference Drawings

Drwg. No.	Title

Revisions

	Name	Date	Notes
A	仇俊	2018.07.15	First issue

巴基斯坦默蒂亚里—拉合尔±660kV直流输电工程

±660kV HVDC Project from Matiari to Lahore in Pakistan

NATIONAL TRANSMISSION & DESPATCH COMPANY (NTDC) LIMITED PAKISTAN

CONTRACTOR 国家电网 STATE GRID 中国电力技术装备有限公司 CHINA ELECTRIC POWER EQUIPMENT AND TECHNOLOGY CO.,LTD.

SUBCONTRACTOR East China Electric Power Design Institute Co.,Ltd.

拉合尔±660kV换流站

±660kV Lahore Converter Station

设计阶段 PHASE: 施工图 Detail Design

M L H V D C - L C S - E C I - D D - C S - 0 3 1 5 - 0 0 4 A

	姓名 Name	日期 Date
设计 Designed	仇俊	18.07.15
校核 Checked	金运峰	18.07.15
审核 Reviewed	邓明证	18.07.15
批准 Approved	谢俊	18.07.15
比例 Scale		图号 DWG NO.

支架详图3

Detail drawing 3 of equipment bracket

30-B003701S-T0315-004

版本 REV. A

专业 Speciality	会签 Sign	日期 Date
电气	郑煜	18.07.15

420X594